300.9D

Mini Hydraulic Excavator

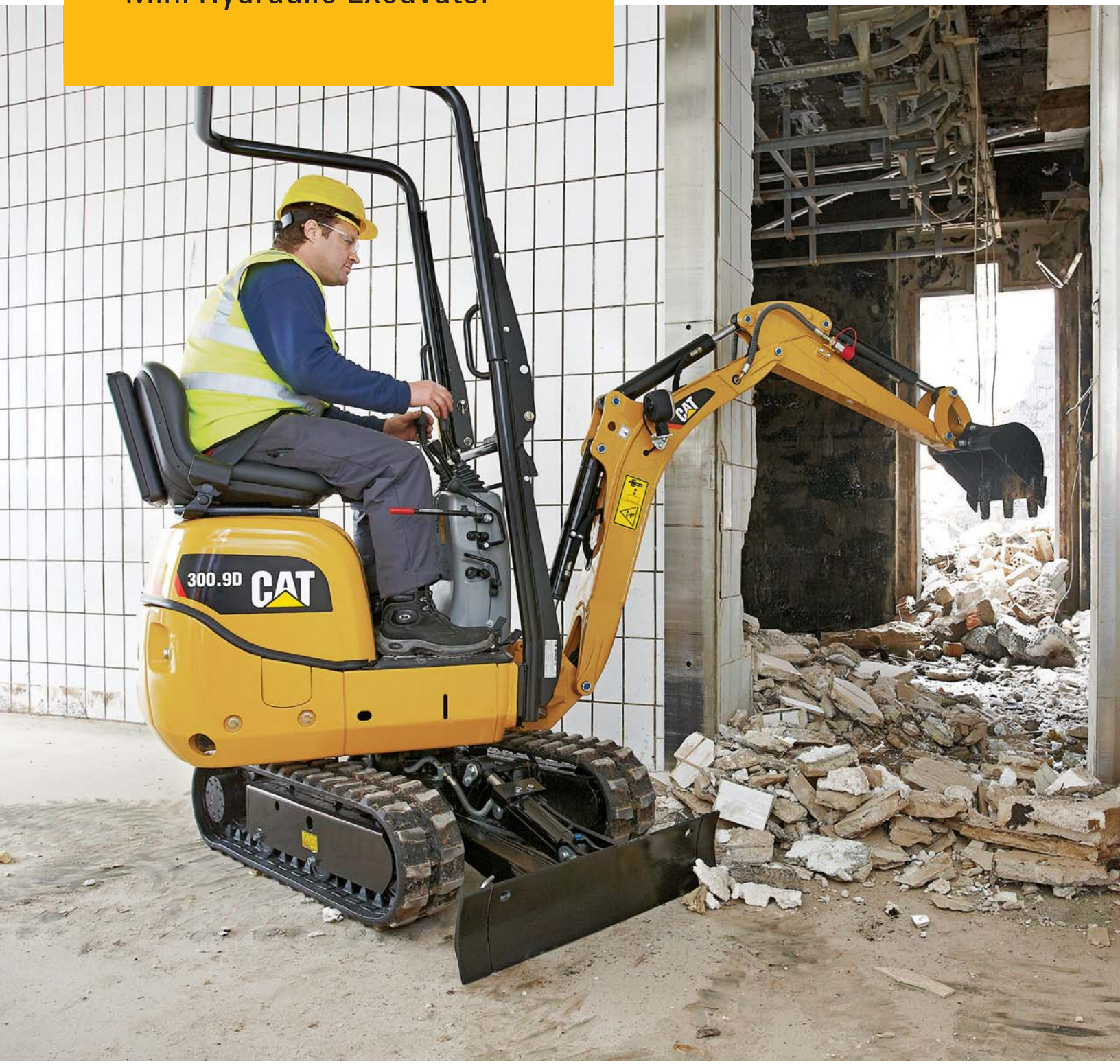

Engine		
Horsepower	13.7 kW	18 hp
Weight		
Transport weight without Safety frame	935 kg	2,060 lb
Transport weight with Safety frame	985 kg	2,170 lb

Compact Dimensions

Easy site access

Compact Dimensions

With an overall width of only 730 mm (2 ft 5 in) the Cat® 300.9D can easily drive through narrow passages and doors. Both indoor and outdoor jobs are now accessible with the under 1000 kg (2,205 lb) weight making easy trailer transportation between sites possible.

Extending Undercarriage and Blade

An extending undercarriage and fold out dozer blade allow the machine to be configured for excellent working stability and optimum performance. Easy retraction, controlled from the operator's seat, enables the machine to pass through narrow openings.

Foldable Safety Frame

A protective safety frame structure mounted on the front of the machine allows fitting of a guard for extra operator protection during hammer use. The structure folds down in a few seconds for easy machine transportation and storage.

Performance and Durability

Powerful performance, Robust construction, Work tool ready

Powerful Engine and Hydraulics

The 13.7 kW (18 hp) engine and perfectly matched hydraulics provide efficient, economical and reliable performance for the toughest of jobs. The matched cooling system is designed to accommodate working within confined areas and also the powerful Cat® hammer.

Low noise and vibration levels deliver comfortable operation.

Hose and Cylinder Protection

Bucket hoses are well protected within the boom and the cylinder is mounted above the structure to increase the machines durability for working in tough environments. The clean lines of the front linkage also provide excellent visibility to the digging area.

Auxiliary Hydraulics as Standard

The 300.9D is fitted with auxiliary lines for hammer operation routed down to the stick. Locating the connecting point close to the work tool reduces connecting hose lengths and potential for damage.

User Friendly Operation

Simple controls – Easily maintained

Simple Controls (Ease of Use)

The operator area is spacious and laid out to provide comfort and ease of operation. Smooth, precision operation of functions is possible from independent controls allowing all skill levels to be productive with little practice.

Extending Dozer Blade

Blade extensions simply rotate and lock into position allowing the machine to be quickly configured for narrow width or maximum blade coverage.

Locking pins and extension plates are retained with the machine to reduce potential for lost or damaged components.

Serviceability

Service and maintenance time is reduced to a minimum with a simple to open steel engine cover and all maintenance and greasing points easily accessible.

Customer Support

Low operating costs with excellent services and options

Customer Support

Product supported through the Cat dealer and worldwide parts network aimed at minimizing downtime.

- Finance options
- Warranty options
- Maintenance contracts
- Help and advice in product and option selection to maximize efficiency and operating profitability

Work Tools

A range of tools is available to take advantage of the machines versatility. All tools are matched to the machine to optimize performance and deliver excellent value through high productivity and long life.

Specifications

Operational Data

Transport weight without Safety frame	935 kg	2,060 lb
Transport weight with Safety frame	985 kg	2,170 lb
Digging force – Stick	4.5 kN	1,011 lbf
Digging force – Bucket	8.9 kN	2,000 lbf

Engine

Make/type	Yanmar 31NV70	
Type	Water cooled model 3-cylinder diesel engine	
Maximum engine output	13.7 kW	18 hp
Flywheel output ISO	9.6 kW	13 hp
Displacement	854 cm^3	52 in^3
Rated speed	2,100 rpm	
Battery	12 V, 20 Amp	
Diesel tank volume	10 L	2.64 gal

Hydraulic System

Pumps	2 gear pumps	
Discharge capacity	11.4 + 11.4 L/min (3 + 3 gal/min)	
Operating pressure for the work and travel hydraulics	170 bar	2,466 psi
Operating pressure pivot	70 bar	1,015 psi
Hydraulic tank capacity	14 L	3.7 gal

Chassis and Swivel Gear

Travel speed	1.8 km/h	1.12 mph
Gradeability	30°/58%	
Track width	180 mm	7 in
Number of rollers per side	2	
Ground clearance	127 mm	5 in
Ground pressure	0.25 kg/cm^2	3.5 psi
Machine swing speed	8 rpm	

Dozer Blade

Width	700 mm	2 ft 4 in
Height	200 mm	8 in
Lift height	197 mm	8 in
Dig depth	174 mm	7 in

Noise Emissions

Sound power level (LWA) (to 2000/14/EG)	93 dB(A)

Lift Force – Standard Stick

	A			
	2.0 m (79 in)	2.5 m (98 in)	2.0 m (79 in)	2.5 m (98 in)
B	lengthways		crossways	
1.0 m (39 in)	242 (534)	204 (450)	176 (388)	125 (276)
0.5 m (20 in)	272 (600)	203 (448)	169 (373)	122 (269)

A = distance from machine center of rotation
B = load stop height from ground level

- The data [in kg (lb)] is without the excavation tools and is ISO 10567 compliant. Lengthways data with dozer blade support. Neither 75% of the static tipping load, nor 87% of the hydraulic lift forces, are extended.

Standard Equipment

Standard equipment may vary. Consult your Cat dealer for details.

Rubber belt track, 180 mm (7 in) wide
Dozer blade, with side extensions
Hydraulic extending undercarriage
Adjustable vinyl seat
Retractable seatbelt
Boom mounted work light
Auxiliary hydraulic circuit, with one-way (hammer) lines to stick
Ecology drain for hydraulic tank

Optional Equipment

Optional equipment may vary. Consult your Cat dealer for details.

Buckets: 250 mm (10 in); 350 mm (15 in); 700 mm (2 ft 4 in)
Custom color paint
Hammer
Front guard
2 way (auger) auxiliary lines to the stick
Rotating beacon
Bio oil

Dimensions

All dimensions are approximate

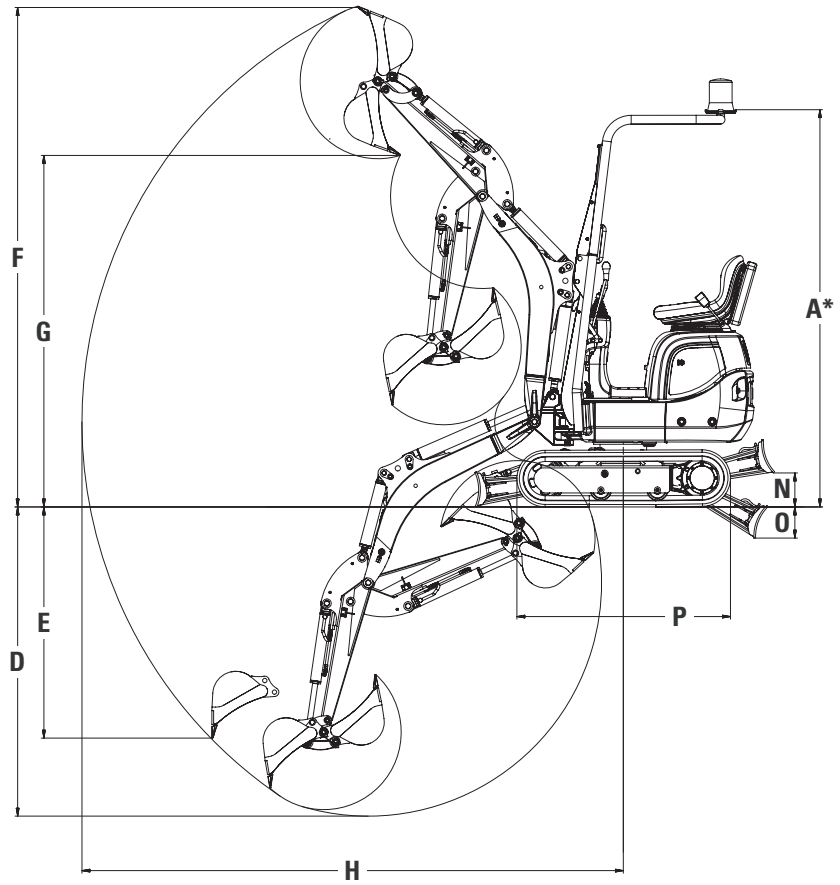

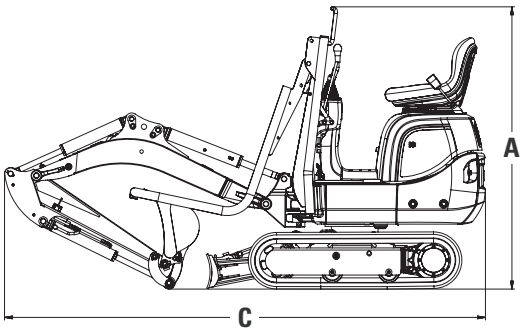

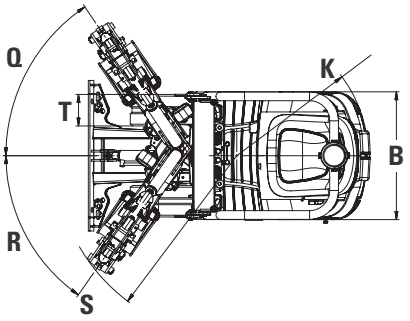

A	Height	1507 mm	4 ft 11 in
A*	Height	2276 mm	7 ft 6 in
B	Width	730 mm	2 ft 5 in
	Undercarriage width – Retracted	700 mm	2 ft 4 in
	Undercarriage width – Extended	860 mm	2 ft 10 in
C	Transport length (arm lowered)	2746 mm	9 ft 0 in
D	Maximum digging depth	1731 mm	5 ft 8 in
E	Maximum vertical dig depth	1349 mm	4 ft 5 in
F	Maximum dig height	2863 mm	9 ft 5 in
G	Maximum dump height	2035 mm	6 ft 8 in
H	Maximum reach	3074 mm	10 ft 1 in
	Maximum reach at ground level	3028 mm	9 ft 11 in
K	Tail swing radius	747 mm	2 ft 5 in
N	Maximum dozer lift height	197 mm	8 in
O	Maximum dozer dig depth	174 mm	7 in
P	Length of undercarriage	1220 mm	4 ft 0 in
Q	Boom swing angle (Right)	56°	
R	Boom swing angle (Left)	55°	
S	Minimum front linkage swing radius	1150 mm	3 ft 9 in
T	Track width	180 mm	7 in

300.9D Mini Hydraulic Excavator

For more complete information on Cat products, dealer services, and industry solutions, visit us on the web at **www.cat.com**

© 2011 Caterpillar Inc.
All rights reserved

AEHQ6160 (03-2011)

Materials and specifications are subject to change without notice. Featured machines in photos may include additional equipment. See your Cat dealer for available options.

CAT, CATERPILLAR, SAFETY.CAT.COM, their respective logos, “Caterpillar Yellow” and the “Power Edge” trade dress, as well as corporate and product identity used herein, are trademarks of Caterpillar and may not be used without permission.